CLASSIC-LINE

Timeless in Design and Advanced in Technique

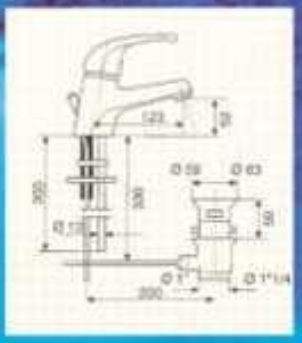

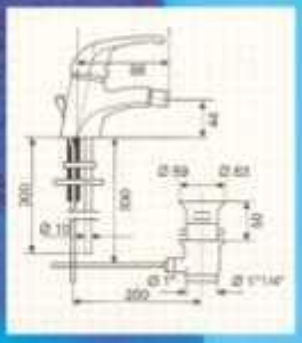

Washbasin Mixer
with Pop-Up Waste 1 1/4"
ART. 802 / H

Bidet Mixer
with Ball-Joint Aerator
and Pop-Up Waste 1 1/4"
ART. 804 / H

Single Lever Mixers

HSH

GERMANY

CLASSIC-LINE

The HSH CLASSIC LINE Single Lever Mixers are working with exchangeable ceramic cartridges for highest reliability, protection from corrosion and lime deposits. The standard equipment covers an ergonomic metal ring-handle, pop-up waste with metal underpart, metal aerator, flexible connections and a fast installation system. Options on request.

Bath and Shower Mixer
with Automatic Diverter,
Complete with High Quality Chromed
Flexible Hose 150 cm, Wall Support and Luxury Hand-Shower
ART. 805 / H

Also available:
Bath and Shower Mixer
with Automatic Diverter, without Shower-Set
ART. 806 / H

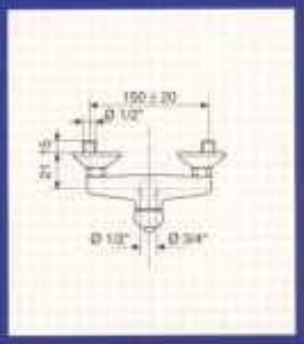

Shower Mixer
Complete with High Quality Chromed
Flexible Hose 150 cm, Wall Support and Luxury Hand-Shower
ART. 817 / H

Also available:
Shower Mixer
without Shower-Set
ART. 807 / H

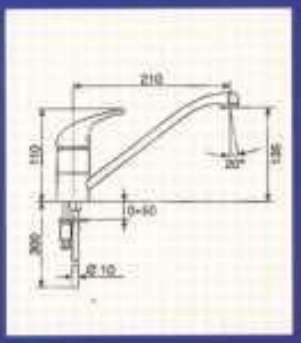

One Hole Sink Mixer
with Cast Swivel Spout
ART. 808 / H

Shower Mixer
with Extractable Handspray and Automatic Diverter: Jet / Spray
ART. 810 / H

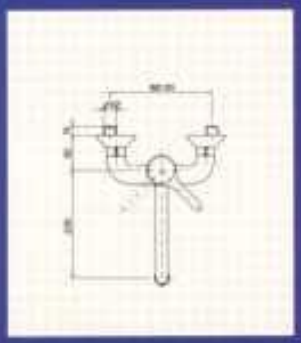

Wall Sink Mixer
with Cast Swivel Spout
ART. 811 / H

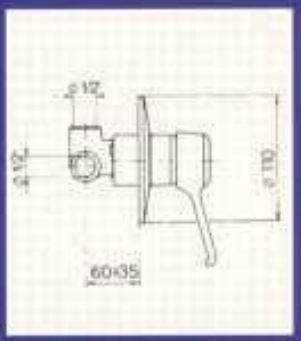

Wall Sink Mixer
for Concealed Installation with Escutcheon 110 mm
ART. 816 / H

HSH is a registered trademark by:
HAN-SANITÄR Trade GmbH & Co.
P.O. Box 11 14 21
D-20414 Hamburg / Germany

Telefax: 00 49 - 40 - 36 79 00
Phone: 00 49 - 40 - 36 75 95
Internet: www.han-sanitaer.com

HSH
GERMANY